Floor to Ceiling



Before you begin

Read the complete guide before assembly. Choose mounting fasteners suitable for your floor and ceiling. The frame has four mounting locations: two at the top and two at the bottom.

Required tools

- Phillips-head screwdriver
- Drill and 3 mm drill bit
- 4 mm Allen key
- Level or plumb line
- Tape measure
- Marker or white pencil
- Metal-cutting saw
- Hammer (optional)
- Clamp (optional)

Included parts

Use these letters throughout the installation steps.

A — **Metal rail**
Rail lengths depend on your order.

B — **Peg bolt**
Attaches wine peg F to A.

C — **Rail self-tapping screw**
Attaches rail A to the frame.

D — **Frame mounting screw**
Use in timber without plugs, or with plugs E in suitable masonry.

E — **Masonry plug**
Fits into the mounting hole in a masonry surface.

F — **Wine peg**
Available in 1,2 or 3 bottle depths. Identify neck and base pegs.

G & H — **FTC frame section (top & bottom)**
G: bottom section, cut to size. H: top section, do not cut.

Fixings for your surface

Masonry
Masonry plugs E with matching mounting screws D.

Timber
Use supplied mounting screws D without plugs.

Concrete
Suitable concrete screws or concrete anchors.

Select fixings suitable for the surface and load. Alternative fixings are not supplied.

Measure and fit the frame

01 Measure the space

Measure the floor-to-ceiling height at the intended installation position.

02 Connect the frame sections

Connect frame sections G and H on the floor. Measure the total assembled length. Subtract the floor-to-ceiling measurement to calculate the excess length.

Example

3,050 mm frame height - 2,500 mm ceiling height = 550 mm excess.

03 Mark, cut and check

Mark both sides of bottom frame section G at the same height. Cut the excess from G only. Do not cut top frame section H. Reconnect the frame and check that it fits the measured space

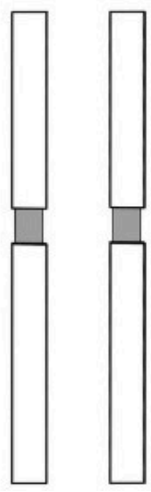

Frame connection

Keep both sides level when marking. Recheck the assembled height before continuing.

Cut G only, Do not cut H.

Position the rails and frame

04 Choose the bottle direction

Choose whether the bottles will face left or right.
Identify the bottle-base and bottle-neck pegs.
The neck peg must sit 20 mm above the base peg.

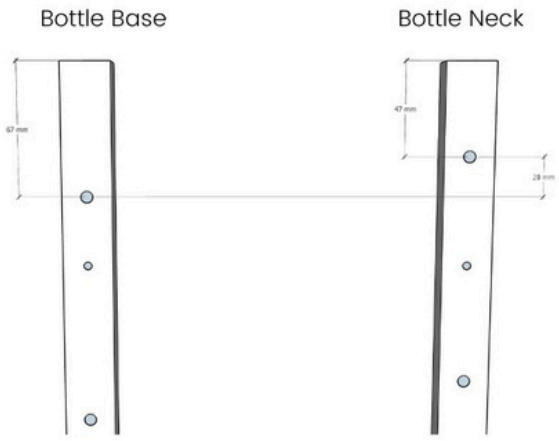

05 Mark the rail screw positions

Position rails A on the frame and mark the screw locations using the existing holes.
Remove the rails and drill the marked frame holes with a 3 mm drill bit.

Where possible, place the rail over the frame joint to help add stability.

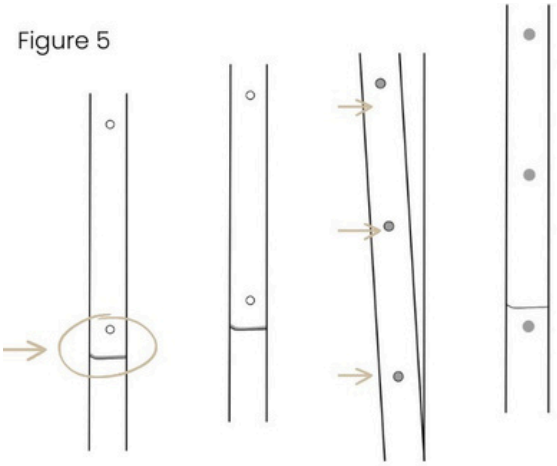

06 Mark and drill the mounting holes

Stand the frame in position. Use a level or plumb line to check that it is vertical. Mark the two mounting holes at the top and the two at the bottom, then drill the pilot holes

To make a plumb line, tie a small weight to a piece of string. Hang it from a centre support and use it to check that the frame is vertical.

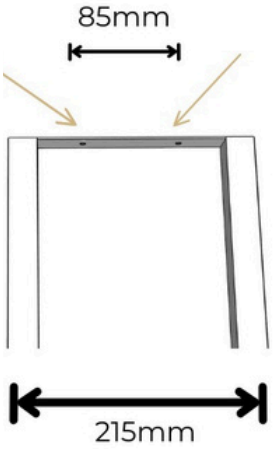

Mounting holes: 85 mm apart

Assemble and secure

07 Install the wine pegs

Attach wine pegs F to rails A using peg bolts B. The pegs must point out from the flat side of the rail, with the bolts aligned in the groove. Put all base pegs on one rail and all neck pegs on the other.

Figure 8

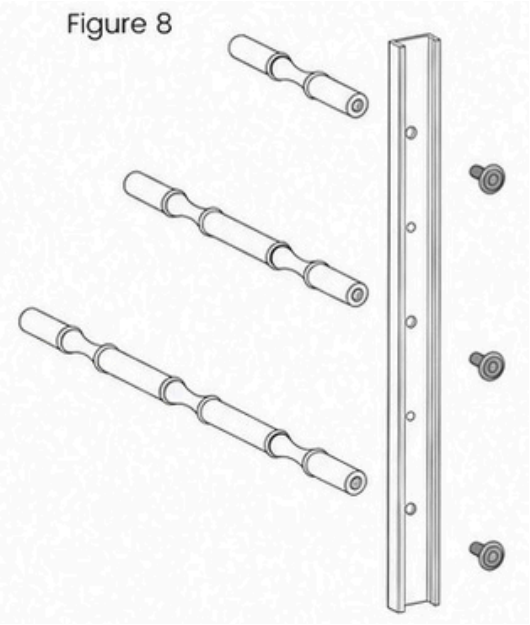

08 Attach the rails

Attach rails A to the frame using screws C. Check that each neck peg is 20 mm higher than its matching base peg.

09 Secure the frame

Stand the frame in place. Secure it to the floor and ceiling at all four mounting points using fixings suitable for each surface.

FIXINGS BY SURFACE
Masonry: plugs E + screws D.
Timber: screws D, without plugs.
Concrete: suitable concrete screws or concrete anchors.

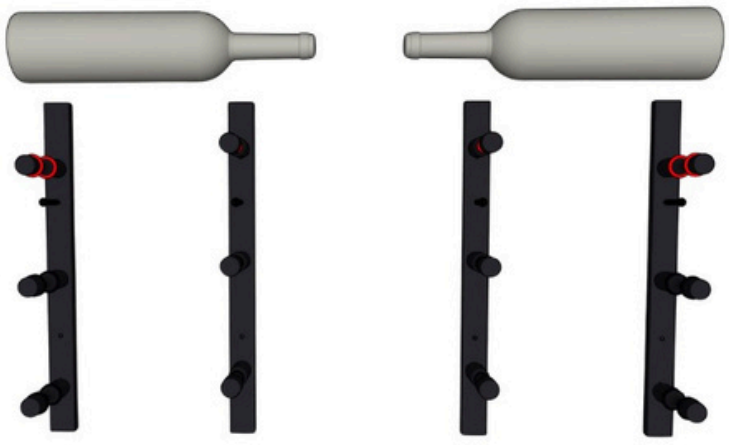

10 Add your wine

Once the rack is securely installed, place your bottles on the pegs.

Multiple rack sets

Allow at least 365mm horizontally between the centres of adjacent rack sets.

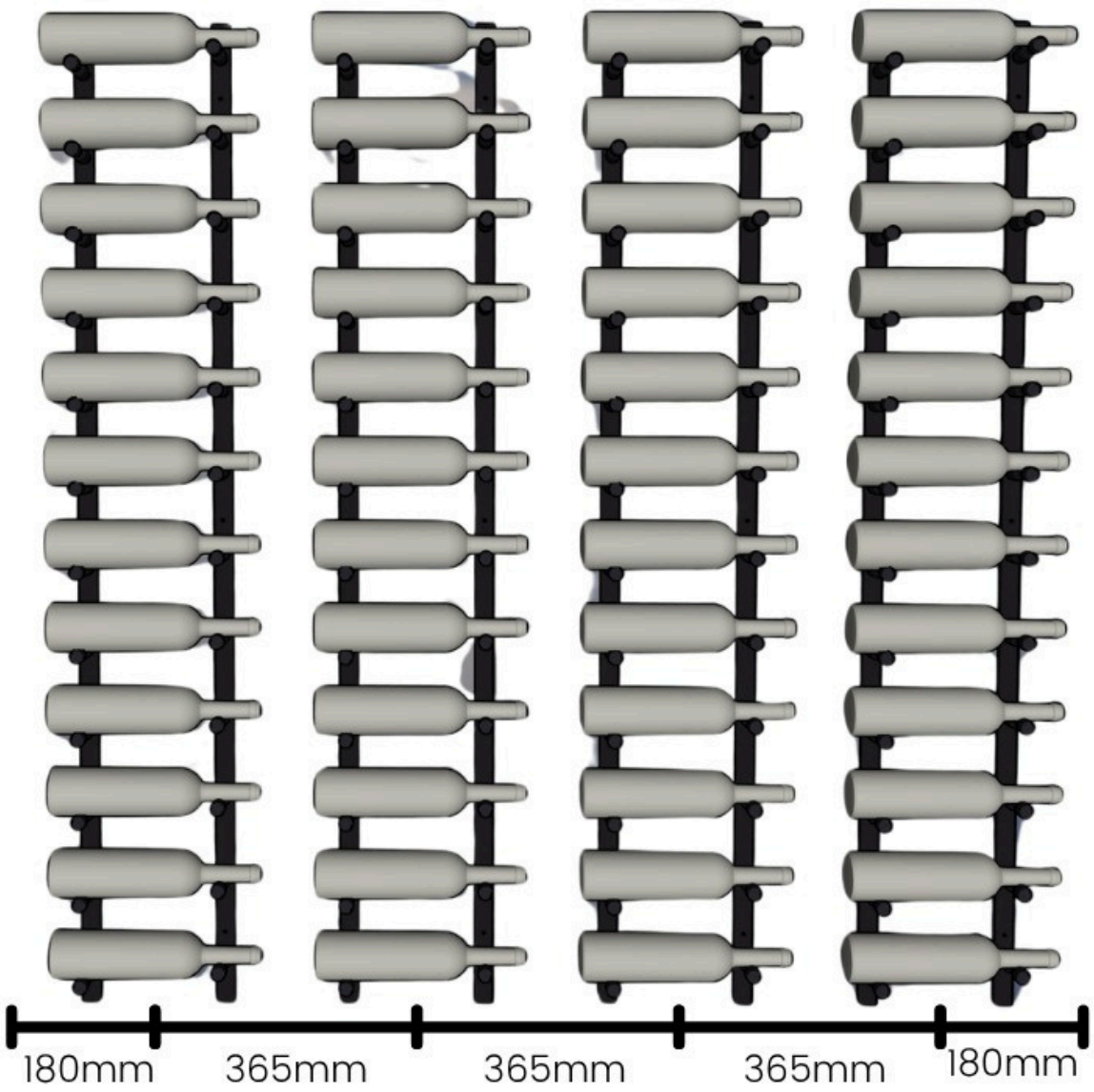

Centre-to-centre spacing

The diagram shows a minimum centre-to-centre spacing of 365 mm between sets, with 180 mm marked at each outside edge.

Rail fixing points

Use the diagram for your rail size. All measurements are in millimetres (mm).



12-bottle rail

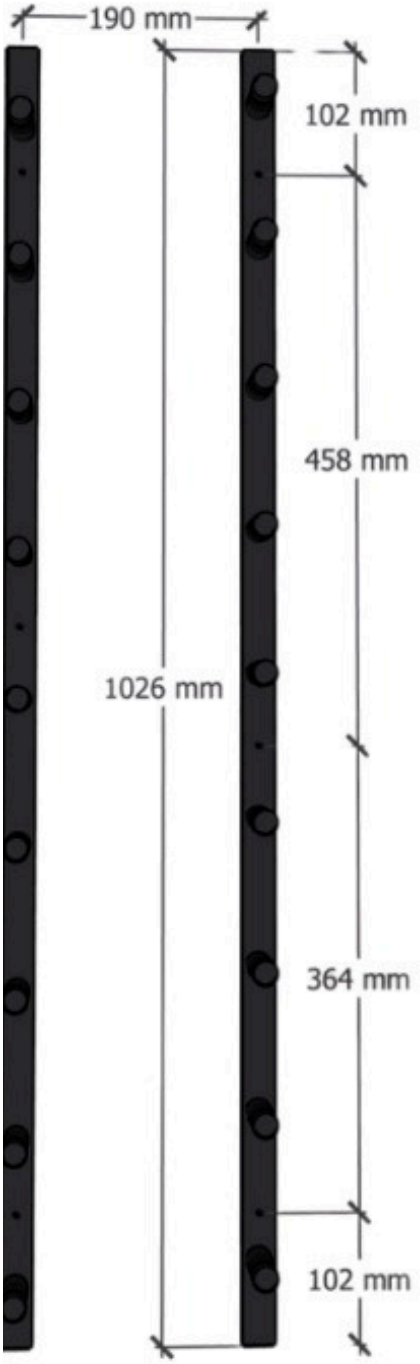

9-bottle rail